SYMETRICS Deck-mounted basin spout without pop-up waste - Chrome

13 721 980 Product version from 4/30/2009

- 165mm projection
- fixed spout
- circular, air-enriched flow
- height of mixer 230 mm
- height up to aerator 205 mm
- hole diameter 35 mm
- rosette 60 x 60 mm
- 2x screw-in M 10 x 1 pressure hose, leak-tested
- 1/2" connection
- max. flow 7 l/min
- lead-free

SYMETRICS Deck-mounted basin spout without pop-up waste - Chrome

13 721 980 Product version from 4/30/2009

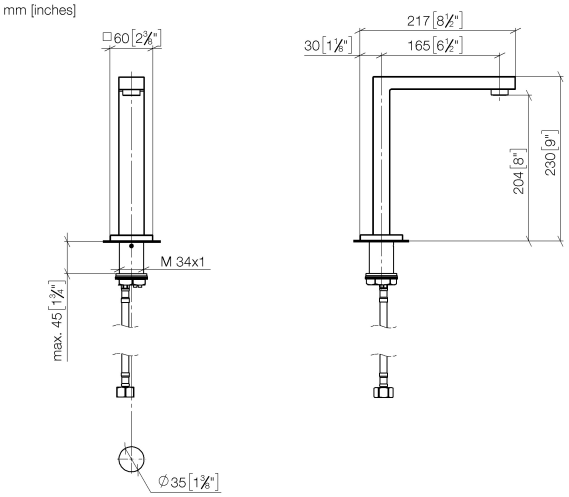

Flow rate chart

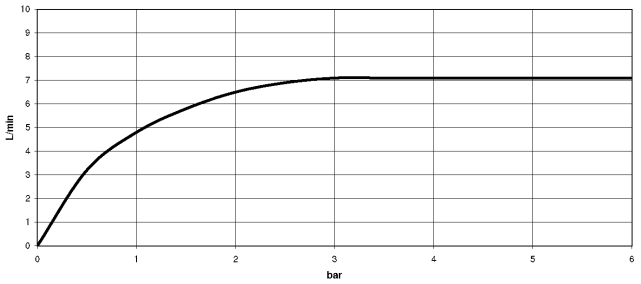

Codes & Standards

DIN 4109	EN 200	ISO 3822	Ü-Zeichen

VA-Zeichen

SYMETRICS Deck-mounted basin spout without pop-up waste - Chrome

13 721 980 Product version from 4/30/2009

Certificates

ETA_18 LGA_18

SYMETRICS Deck-mounted basin spout without pop-up waste - Chrome

13 721 980 Product version from 4/30/2009

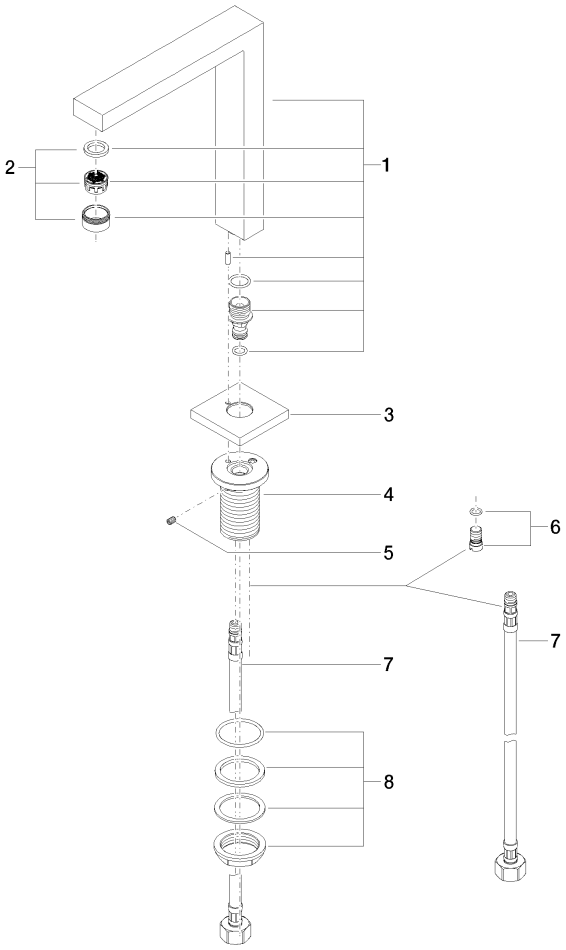

Spare parts list

No.	Item Number	Name	Quantity used	Delivery time
1	90 11 06 192 05-00	spout	1	10
2	90 23 01 029 02-00	aerator	1	10
3	09 27 68 002-00	rosette	1	10
4	09 30 01 102 10 90	sleeve	1	2
5	09 31 11 036 90	pin	1	2
6	04 31 20 046 10 92	set	1	2
7	04 30 04 019 00 90	hose	2	2
8	04 23 10 044 00 90	fixing set	1	2

We reserve the right to change designs, product range and technical specifications without prior notice.
More information can be found at: www.dornbracht.com +49 (0) 2371 8899 900 mail@dornbracht.com